Cambridge Assessment International Education

Cambridge International AS & A Level

CANDIDATE NAME

CENTRE NUMBER

CANDIDATE NUMBER

3847547519

PHYSICS **9702/22**

Paper 2 AS Level Structured Questions **May/June 2021**

1 hour 15 minutes

You must answer on the question paper.

No additional materials are needed.

INSTRUCTIONS

- Answer **all** questions.
- Use a black or dark blue pen. You may use an HB pencil for any diagrams or graphs.
- Write your name, centre number and candidate number in the boxes at the top of the page.
- Write your answer to each question in the space provided.
- Do **not** use an erasable pen or correction fluid.
- Do **not** write on any bar codes.
- You may use a calculator.
- You should show all your working and use appropriate units.

INFORMATION

- The total mark for this paper is 60.
- The number of marks for each question or part question is shown in brackets [ ].

This document has **16** pages. Any blank pages are indicated.

DC (ST/JG) 198451/2
© UCLES 2021

[Turn over

PapaCambridge

Data

speed of light in free space	$c = 3.00 \times 10^{8}\,\text{m s}^{-1}$
permeability of free space	$\mu_0 = 4\pi \times 10^{-7}\,\text{H m}^{-1}$
permittivity of free space	$\varepsilon_0 = 8.85 \times 10^{-12}\,\text{F m}^{-1}$
	$(\frac{1}{4\pi\varepsilon_0} = 8.99 \times 10^{9}\,\text{m F}^{-1})$
elementary charge	$e = 1.60 \times 10^{-19}\,\text{C}$
the Planck constant	$h = 6.63 \times 10^{-34}\,\text{J s}$
unified atomic mass unit	$1\,\text{u} = 1.66 \times 10^{-27}\,\text{kg}$
rest mass of electron	$m_e = 9.11 \times 10^{-31}\,\text{kg}$
rest mass of proton	$m_p = 1.67 \times 10^{-27}\,\text{kg}$
molar gas constant	$R = 8.31\,\text{J K}^{-1}\,\text{mol}^{-1}$
the Avogadro constant	$N_A = 6.02 \times 10^{23}\,\text{mol}^{-1}$
the Boltzmann constant	$k = 1.38 \times 10^{-23}\,\text{J K}^{-1}$
gravitational constant	$G = 6.67 \times 10^{-11}\,\text{N m}^2\,\text{kg}^{-2}$
acceleration of free fall	$g = 9.81\,\text{m s}^{-2}$

© UCLES 2021

PapaCambridge

Formulae

uniformly accelerated motion	$s = ut + \frac{1}{2}at^2$ $v^2 = u^2 + 2as$
work done on/by a gas	$W = p\Delta V$
gravitational potential	$\phi = -\frac{Gm}{r}$
hydrostatic pressure	$p = \rho gh$
pressure of an ideal gas	$p = \frac{1}{3}\frac{Nm}{V}\langle c^2 \rangle$
simple harmonic motion	$a = -\omega^2 x$
velocity of particle in s.h.m.	$v = v_0 \cos \omega t$ $v = \pm \omega\sqrt{(x_0^2 - x^2)}$
Doppler effect	$f_o = \frac{f_s v}{v \pm v_s}$
electric potential	$V = \frac{Q}{4\pi\varepsilon_0 r}$
capacitors in series	$1/C = 1/C_1 + 1/C_2 + \ldots$
capacitors in parallel	$C = C_1 + C_2 + \ldots$
energy of charged capacitor	$W = \frac{1}{2}QV$
electric current	$I = Anvq$
resistors in series	$R = R_1 + R_2 + \ldots$
resistors in parallel	$1/R = 1/R_1 + 1/R_2 + \ldots$
Hall voltage	$V_H = \frac{BI}{ntq}$
alternating current/voltage	$x = x_0 \sin \omega t$
radioactive decay	$x = x_0 \exp(-\lambda t)$
decay constant	$\lambda = \frac{0.693}{t_{\frac{1}{2}}}$

© UCLES 2021

[Turn over

PapaCambridge

Answer **all** the questions in the spaces provided.

1 **(a)** Complete Table 1.1 by stating whether each of the quantities is a vector or a scalar.

Table 1.1

quantity	vector or scalar
acceleration	
electrical resistance	
momentum	

[2]

(b) State the conditions for an object to be in equilibrium.

.....

.....

.....

..... [2]

(c) A floating solid cylinder is attached by a wire to the sea bed, as shown in Fig. 1.1.

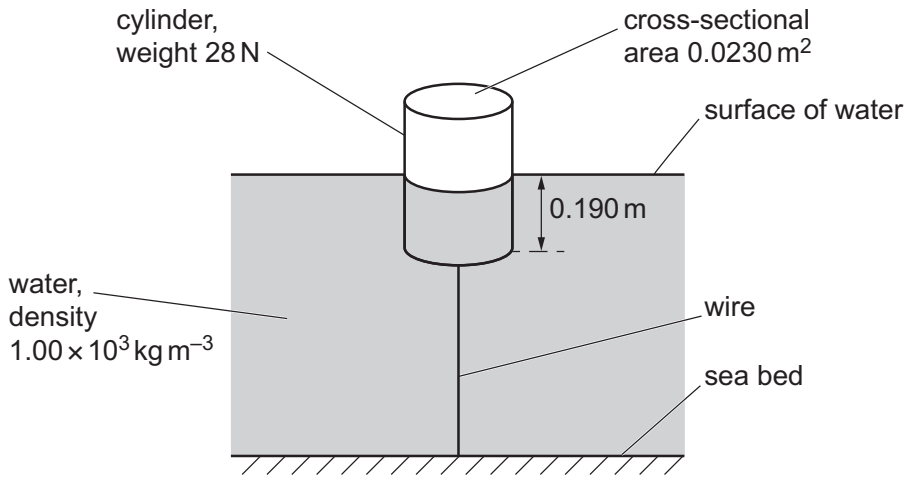

Fig. 1.1 (not to scale)

The density of the water is $1.00 \times 10^3\,\text{kg m}^{-3}$. The base of the cylinder is at a depth of 0.190 m below the surface of the water. The cylinder has a weight of 28 N and a cross-sectional area of $0.0230\,\text{m}^2$.

The wire and the central axis of the cylinder are both vertical. The cylinder is in equilibrium.

© UCLES 2021

PapaCambridge

(i) Calculate, to three significant figures, the upthrust acting on the cylinder due to the water.

upthrust = ... N [2]

(ii) Show that the tension T in the wire is 15 N.

[1]

(iii) The wire has a cross-sectional area of 3.2 mm^2.

Calculate the stress in the wire.

stress = ... Pa [2]

(iv) The surface of the water gradually rises until it is level with the top face of the cylinder.

State and explain, qualitatively, the variation of the strain energy stored in the wire as the water surface rises.

.....

.....

.....

..... [2]

[Total: 11]

© UCLES 2021

[Turn over

PapaCambridge

2 A ball is thrown vertically downwards to the ground, as illustrated in Fig. 2.1.

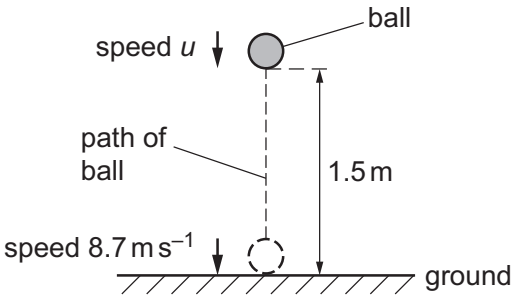

Fig. 2.1

The ball is thrown with speed u from a height of 1.5 m. The ball then hits the ground with speed 8.7 m s^{-1}. Assume that air resistance is negligible.

(a) Calculate speed u.

u = ... m s^{-1} [2]

(b) State how Newton's third law applies to the collision between the ball and the ground.

.....

.....

.....

..... [2]

(c) The ball is in contact with the ground for a time of 0.091 s. The ball rebounds vertically and leaves the ground with speed 5.4 m s^{-1}. The mass of the ball is 0.059 kg.

(i) Calculate the magnitude of the change in momentum of the ball during the collision.

change in momentum = ... N s [2]

© UCLES 2021

PapaCambridge

(ii) Determine the magnitude of the average resultant force that acts on the ball during the collision.

average resultant force = ... N [1]

(iii) Use your answer in **(c)(ii)** to calculate the magnitude of the average force exerted by the ground on the ball during the collision.

average force = ... N [2]

(d) The ball was thrown downwards at time $t = 0$ and hits the ground at time $t = T$.

On Fig. 2.2, sketch a graph to show the variation of the speed of the ball with time t from $t = 0$ to $t = T$. Numerical values are not required.

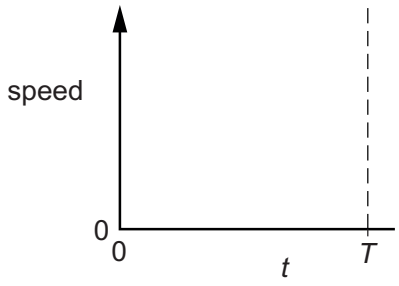

Fig. 2.2

[1]

(e) In practice, air resistance is not negligible.

State and explain the variation, if any, with time t of the gradient of the graph in **(d)** when air resistance is not negligible.

.....

.....

.....

..... [2]

[Total: 12]

PapaCambridge

3 A child of weight 330 N is at point X at the top of a slide. The slide is at the edge of a swimming pool, as shown in Fig. 3.1.

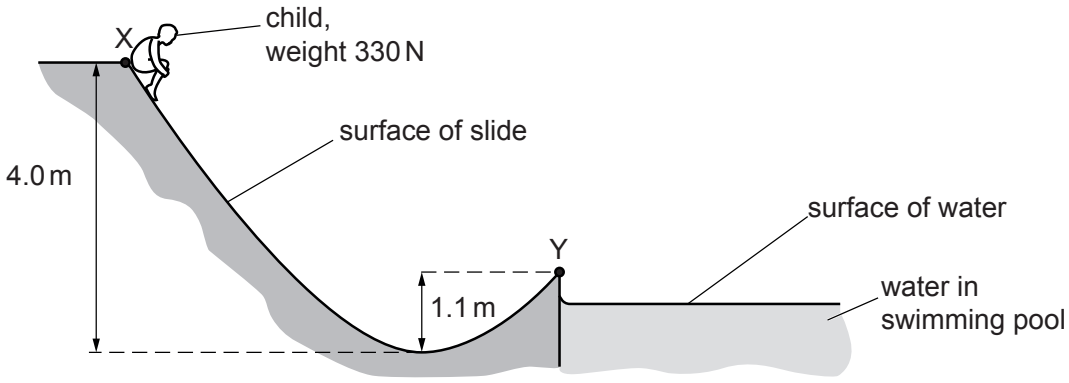

Fig. 3.1 (not to scale)

The child moves from rest to the lowest point of the slide that is a vertical distance of 4.0 m below X. The child continues moving towards point Y which is at the end of the slide and a vertical distance of 1.1 m above the lowest point. The kinetic energy of the child at Y is 540 J.

(a) Calculate the difference in the gravitational potential energy of the child at points X and Y.

difference in gravitational potential energy = ... J [2]

(b) An average frictional force of 52 N acts on the child when moving from X to Y.

By considering changes of energy, determine the distance moved by the child from X to Y.

distance moved = ... m [2]

© UCLES 2021

PapaCambridge

(c) The child leaves the slide at point Y with a velocity that is at an angle of 41° to the horizontal. The path of the child through the air is shown in Fig. 3.2.

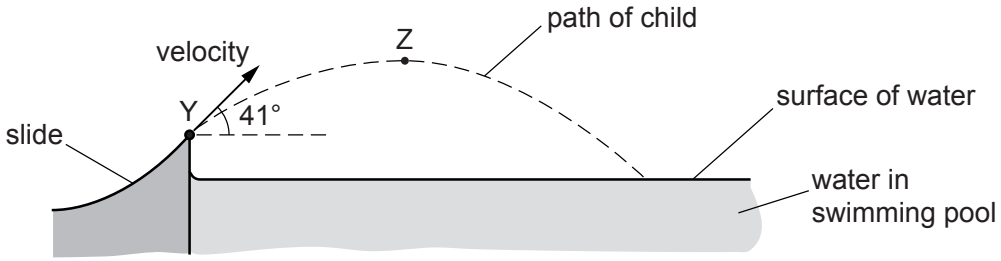

Fig. 3.2 (not to scale)

Point Z is the highest point on the path of the child through the air.
Assume that air resistance is negligible.

Calculate the speed of the child at:

(i) point Y

speed = ... $m\,s^{-1}$ [2]

(ii) point Z.

speed = ... $m\,s^{-1}$ [2]

[Total: 8]

PapaCambridge

4 **(a)** For a progressive wave, state what is meant by its *period*.

.....

..... [1]

(b) State the principle of superposition.

.....

.....

..... [2]

(c) Electromagnetic waves of wavelength 0.040 m are emitted in phase from two sources X and Y and travel in a vacuum. The arrangement of the sources is shown in Fig. 4.1.

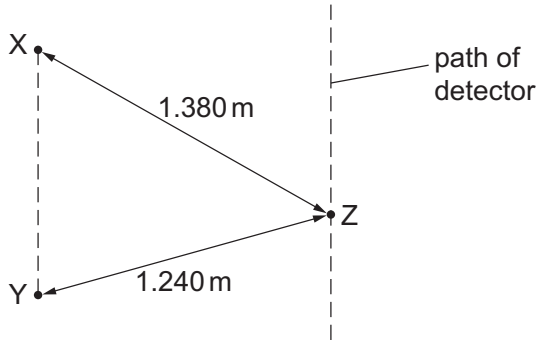

Fig. 4.1 (not to scale)

A detector moves along a path that is parallel to the line XY. A pattern of intensity maxima and minima is detected.

Distance XZ is 1.380 m and distance YZ is 1.240 m.

(i) State the name of the region of the electromagnetic spectrum that contains the waves from X and Y.

..... [1]

(ii) Calculate the period, in ps, of the waves.

period = ... ps [3]

© UCLES 2021

PapaCambridge

(iii) Show that the path difference at point Z between the waves from X and Y is 3.5λ, where λ is the wavelength of the waves.

[1]

(iv) Calculate the phase difference between the waves at point Z.

phase difference = ...° [1]

(v) The waves from X alone have the same amplitude at point Z as the waves from Y alone.

State the intensity of the waves at point Z.

..... [1]

(vi) The frequencies of the waves from X and Y are both decreased to the same lower value. The waves stay within the same region of the electromagnetic spectrum.

Describe the effect of this change on the pattern of intensity maxima and minima along the path of the detector.

.....

..... [1]

[Total: 11]

© UCLES 2021

[Turn over

PapaCambridge

5 **(a)** Define the *ohm*.

.....

..... [1]

(b) A wire is made of metal of resistivity ρ. The length L of the wire is gradually increased. Assume that the volume V of the wire remains constant as its length is increased.

Show that the resistance R of the extending wire is proportional to L^2.

[2]

(c) A battery of electromotive force (e.m.f.) E and internal resistance r is connected to a variable resistor of resistance R, as shown in Fig. 5.1.

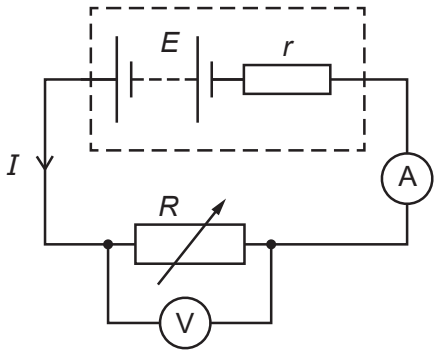

Fig. 5.1

An ammeter measures the current I in the circuit. A voltmeter measures the potential difference V across the variable resistor.

PapaCambridge

The resistance R is now varied to change the values of I and V.

The variation with I of V is shown in Fig. 5.2.

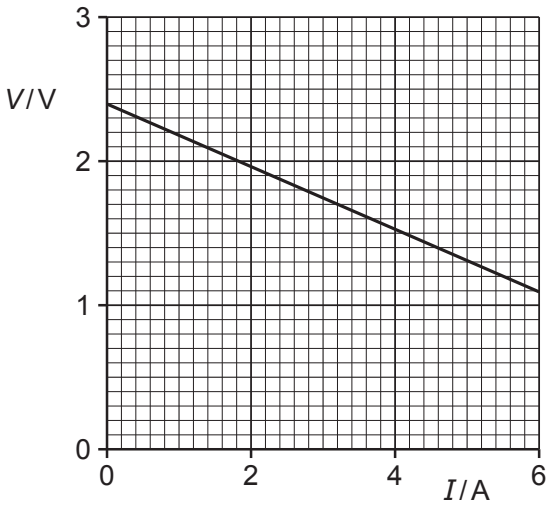

Fig. 5.2

(i) Use Fig. 5.2 to state the e.m.f. E of the battery.

E = ... V [1]

(ii) Use Fig. 5.2 to determine the power dissipated in the variable resistor when there is a current of 5.0A.

power = ... W [3]

(iii) State what is represented by the value of the gradient of the graph.

..... [1]

[Total: 8]

PapaCambridge

6 **(a)** One of the results of the α-particle scattering experiment is that a very small minority of the α-particles are scattered through angles greater than 90°.

State what may be inferred about the structure of the atom from this result.

.....

.....

.....

..... [2]

(b) An α-particle is made up of other particles. One of these particles is a proton.

State and explain whether a proton is a fundamental particle.

.....

..... [1]

(c) A radioactive source produces a beam of α-particles in a vacuum. The average current produced by the beam is 6.9×10^{-9} A.

Calculate the average number of α-particles passing a fixed point in the beam in a time of 1.0 minute.

number = ... [3]

(d) The α-particles in the vacuum in **(c)** enter a uniform electric field. The α-particles enter the field with their velocity in the same direction as the field.

State and explain whether the magnitude of the acceleration of an α-particle due to the field decreases, increases or stays constant as the α-particle moves through the field.

.....

.....

..... [2]

© UCLES 2021

PapaCambridge

(e) A nucleus X is an isotope of a nucleus Y. The mass of nucleus X is greater than that of Y.

Both of the nuclei are in the same uniform electric field.

State and explain whether the magnitude of the electric force acting on nucleus X is greater than, less than or the same as that acting on nucleus Y.

.....

.....

..... [2]

[Total: 10]

© UCLES 2021

PapaCambridge

BLANK PAGE

Permission to reproduce items where third-party owned material protected by copyright is included has been sought and cleared where possible. Every reasonable effort has been made by the publisher (UCLES) to trace copyright holders, but if any items requiring clearance have unwittingly been included, the publisher will be pleased to make amends at the earliest possible opportunity.

To avoid the issue of disclosure of answer-related information to candidates, all copyright acknowledgements are reproduced online in the Cambridge Assessment International Education Copyright Acknowledgements Booklet. This is produced for each series of examinations and is freely available to download at www.cambridgeinternational.org after the live examination series.

Cambridge Assessment International Education is part of the Cambridge Assessment Group. Cambridge Assessment is the brand name of the University of Cambridge Local Examinations Syndicate (UCLES), which itself is a department of the University of Cambridge.

© UCLES 2021

PapaCambridge